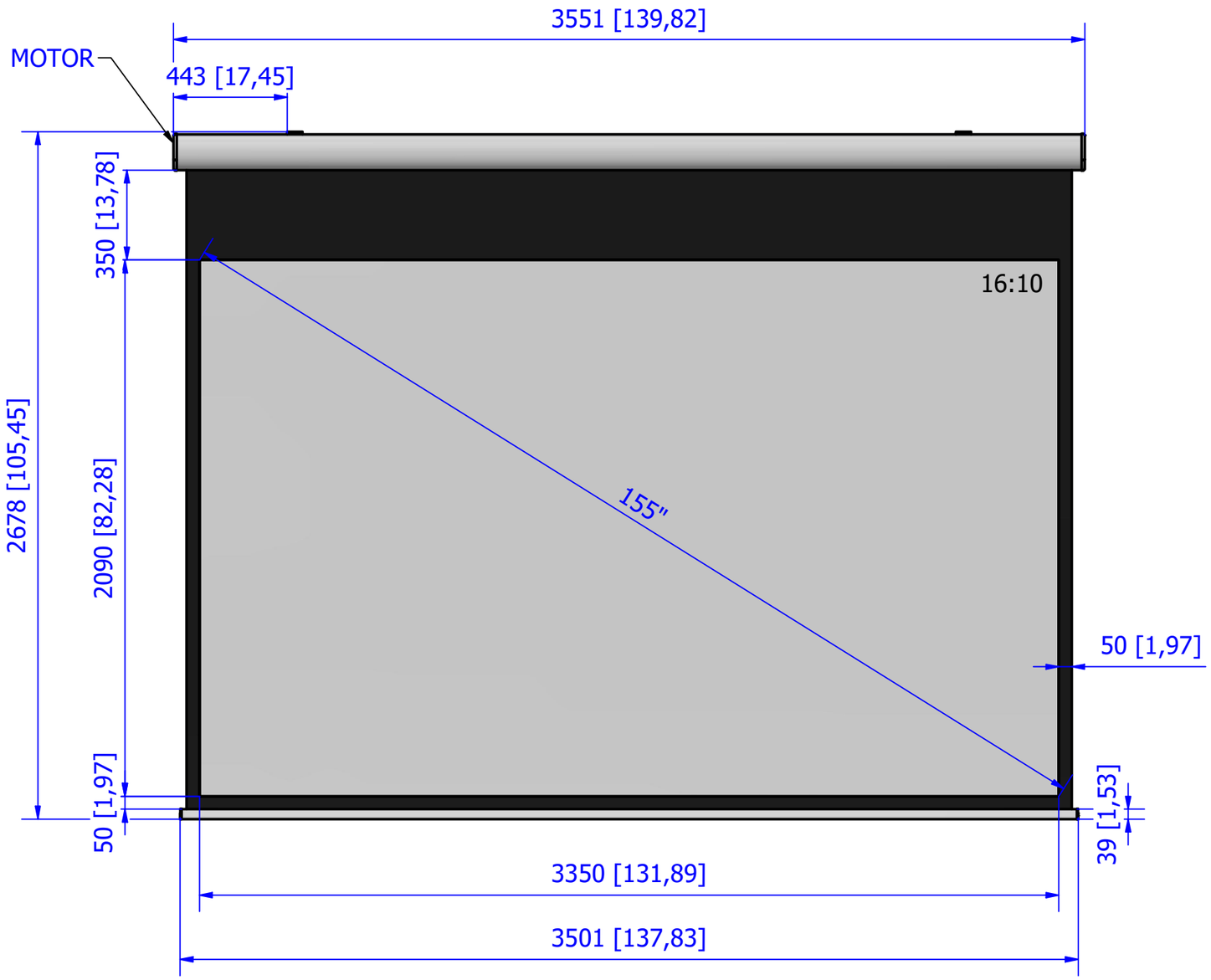

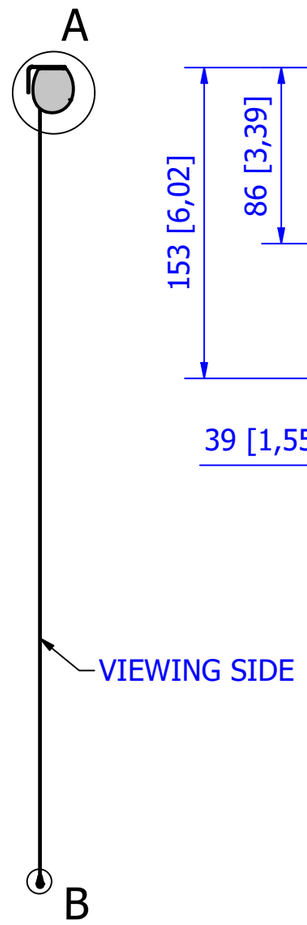

A (1:3)

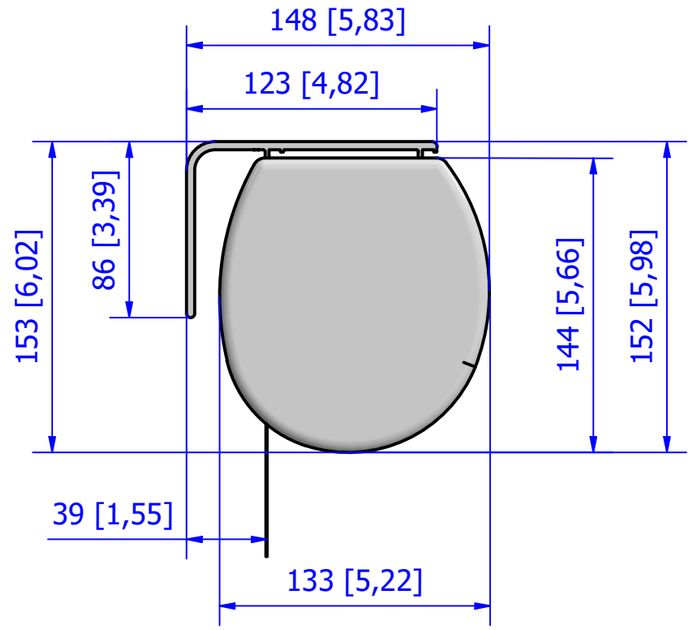

B (1:2)

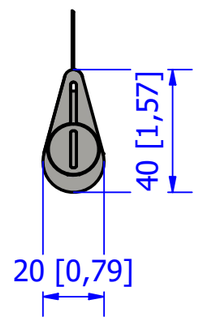

Dimensions are in mm [inch]	SAHARA® The Specialist in AV Solutions	Description: Jago			Codice univoco: JA335#2123	Product Code: 1340566
According on the required fabric, a welding line may be present		Weight: 26kg	Shipping weight: 31kg	Encumbrance: 355x15x16	Drawer: Andrea Barozzi	VCode: UT-0000723.iam
Please notice that all dimensions are subject to conventional industry tollerances				Shipping dimensions: 375x18x18	Date: 06/07/2022	Sheet: A3 / Scale: 1 : 20